**DETAIL #19**

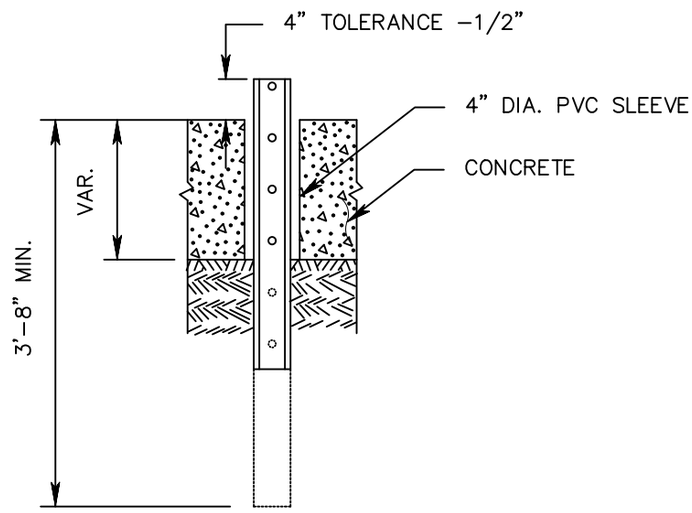


CONCRETE
INSTALLATION

| Revisions | | |
|---|---|---|
| NO. | DATE | BY |
| | | |
| | | |
| | | |
| | | |
| | | |
| | | |
| | | |
| | | |
| | | |
| | | |
| | | |

MIDDLESEX
COUNTY • NJ
*Department of Transportation • Office of Engineering / Planning / Public Works*
*75 Bayard St., New Brunswick, NJ 08901*

**U-POST SIGN SUPPORT**
**CONCRETE INSTALLATION**

*Ronald M. Sendner* *Date*
*Licensed Professional Engineer*
*License No. 24GE03162200*

| Designed By | Drawn By |
|---|---|
| EK | EHC |
| Checked By | Approved By |
| RS | RS |

*Scale:* Not to Scale
*Sheet No.* 1 *of* 1
*Date:* 5/3/2021

*Ronald M. Sendner*
*County Engineer*
*N.J. P.E. No. 24GE03162200*